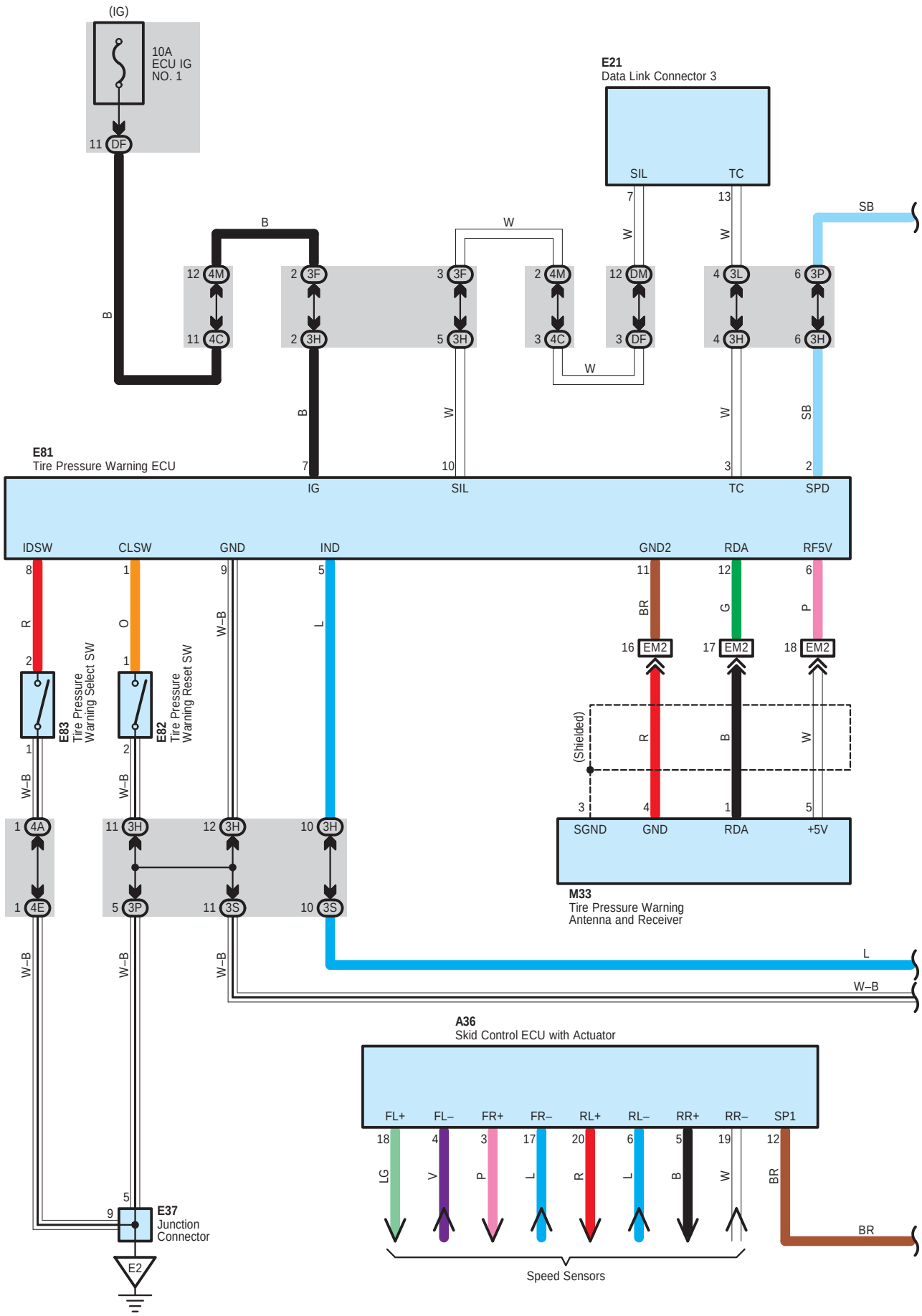
(IG)
10A
ECU IG
NO. 1
11 DF
E21
Data Link Connector 3
SIL
TC
7
13
SB
B
W
12 4M
11 4C
2 3F
2 3H
3 3F
5 3H
2 4M
3 4C
12 DM
3 DF
4 3L
4 3H
6 3P
6 3H
E81
Tire Pressure Warning ECU
IG
SIL
TC
SPD
IDSW
CLSW
GND
IND
GND2
RDA
RF5V
R
O
W–B
L
BR
G
P
16 EM2
17 EM2
18 EM2
E83
Tire Pressure
Warning Select SW
E82
Tire Pressure
Warning Reset SW
(Shielded)
SGND
GND
RDA
+5V
M33
Tire Pressure Warning
Antenna and Receiver
1 4A
1 4E
11 3H
5 3P
12 3H
11 3S
10 3H
10 3S
A36
Skid Control ECU with Actuator
FL+
FL–
FR+
FR–
RL+
RL–
RR+
RR–
SP1
LG
V
BR
Speed Sensors
E37
Junction
Connector
E2

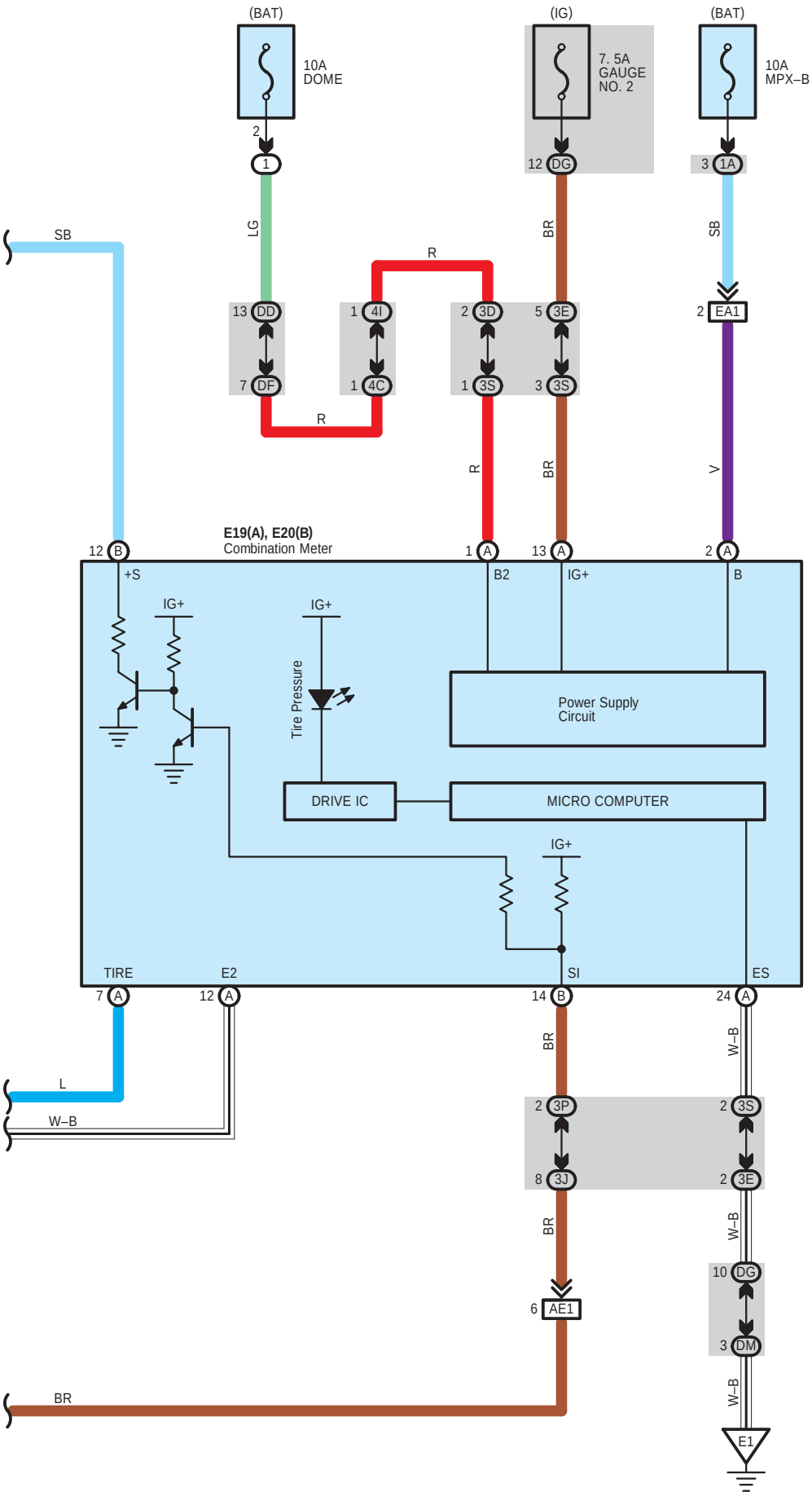
(BAT)
10A
DOME
(IG)
7. 5A
GAUGE
NO. 2
(BAT)
10A
MPX–B
SB
LG
R
BR
SB
13 DD
7 DF
1 4I
1 4C
2 3D
1 3S
5 3E
3 3S
3 1A
2 EA1
R
R
BR
V
E19(A), E20(B)
Combination Meter
12 B
+S
1 A
B2
13 A
IG+
2 A
B
IG+
IG+
Tire Pressure
Power Supply
Circuit
DRIVE IC
MICRO COMPUTER
IG+
TIRE
E2
SI
ES
7 A
12 A
14 B
24 A
BR
W–B
L
W–B
2 3P
8 3J
2 3S
2 3E
BR
W–B
6 AE1
10 DG
3 DM
W–B
BR
E1

Tire Pressure Warning System

System Outline

* In the tire pressure warning system, the warning light illuminates to alert the driver about the low tire pressure when the vehicle continues driving with one of the four tires under such low pressure to cause possible driving disturbance.
* The air pressure sensors installed in the wheels measure air pressure in the tires directly.

: Parts Location

Code		See Page	Code	See Page	Code	See Page
A36		55	E21	58	E82	59
E19	A	58	E37	58	E83	59
E20	B	58	E81	59	M33	62

: Relay Blocks

Code	See Page	Relay Blocks (Relay Block Location)
1	22	Engine Room R/B (Engine Compartment Left)

: Junction Block and Wire Harness Connector

Code	See Page	Junction Block and Wire Harness (Connector Location)
1A	24	Engine Room Main Wire and Engine Room J/B (Engine Compartment Left)
3D	36	Instrument Panel Wire and J/B No.3 (Instrument Panel Left)
3E		
3F		
3H		
3J		
3L		
3P		
3S		
4A	42	Instrument Panel Wire and J/B No.4 (Instrument Panel Right)
4C		
4E		
4I		
4M		
DD	30	Engine Room Main Wire and Instrument Panel J/B (Lower Finish Panel)
DF	30	Instrument Panel Wire and Instrument Panel J/B (Lower Finish Panel)
DG	31	
DM	30	

: Connector Joining Wire Harness and Wire Harness

Code	See Page	Joining Wire Harness and Wire Harness (Connector Location)
AE1	69	Engine Room Main Wire and Instrument Panel Wire (Instrument Panel Right)
EA1	69	Instrument Panel Wire and Engine Room Main Wire (Left Kick Panel)
EM2	69	Instrument Panel Wire and Floor No.2 Wire (Right Kick Panel)

: Ground Points

Code	See Page	Ground Points Location
E1	69	Left Side of the Instrument Panel Reinforcement
E2	69	Instrument Panel Brace LH